Part Number: J03

Modular Jack Dust Cover

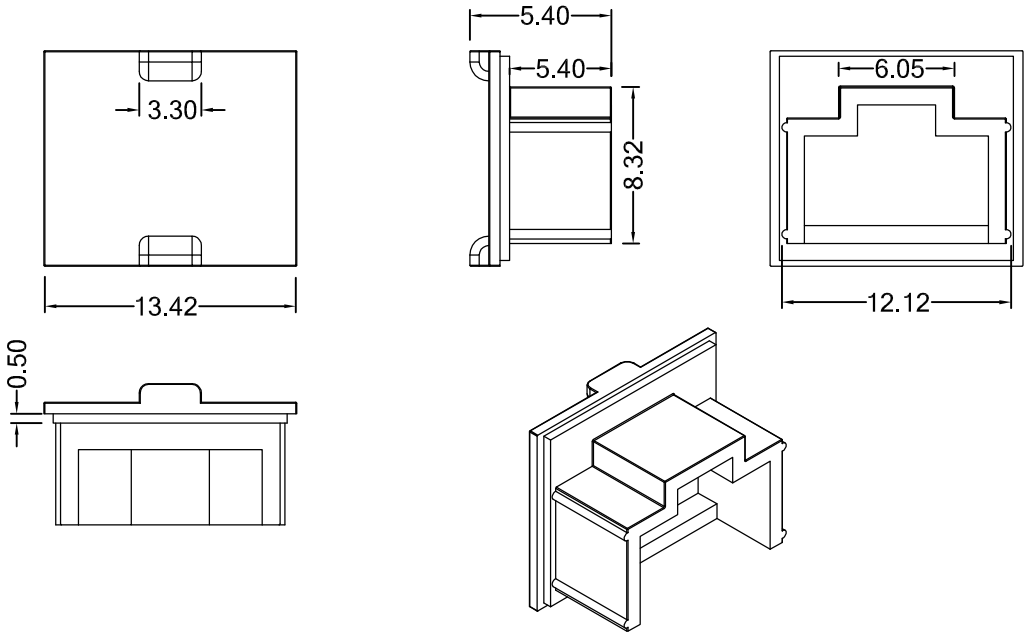

ORDERING INFORMATION

J03 - 8P - __

color
(blank: nature color, BK: black)

MATERIAL & FINISH

Housing: PP, nature color or black
Temperature: -40°C to 70°C

UNIT: m / m
TOL.: +/- 0.15

巨亮企業有限公司
CHU LIANG ENTERPRISE CO.,LTD.
TEL: 886-2-22023997 FAX: 886-2-22023867
E-mail: richard@plug.com.tw
peter@plug.com.tw
WEB: http://www.plug.com.tw